GRANPAC®

maier heidenheim

Rotary Unions for Machine Tools

Series K

Solutions for safe transfer of fluids

Engenharia e Cia®
Cursos | Treinamentos | Consultoria |Produtos para Vedação
Agente de Vendas Granpac - Distribuidor Autorizado Maier
contato@engenhariaecia.eng.br | Whats (11) 95696 7808
https://www.engenhariaecia.eng.br

Application Data

Series	KL		K		KS	
Design	Closed seal		Closed seal		Closed seal	
	Without TESS KL	With TESS KLT	Without TESS K	With TESS K	Without TESS KS	With TESS KS
Nominal diameter DN [mm]	07	07	07...10	07...10	04...10	04...10
Fluid	Cooling lubricant Minimum quantity lubrication	Cooling lubricant, minimum quantity lubrication, air	Cooling lubricant Minimum quantity lubrication	Cooling lubricant, minimum quantity lubrication, air	Cooling lubricant, minimum quantity lubrication	Cooling lubricant, minimum quantity lubrication, air
Pressure PN max. [bar]	70[1]	70[1]	80[1]	80 150	150	150
Temperature max. [°C]	50	50	50	50	50	50
Speed max. [min^{-1}]	10,000[1] 16,000[1]	10,000[1] 16,000[1]	24,000[1]	24,000 42,000	42,000	42,000
Number of passages	1	1	1	1	1	1

[1] Avoid combinations of maximum values. Inquire for greater values and other fluids.

Ordering Information

Example		KLT	1	1	C	07	L	8	-XXX
Series	K KT KL KLT KS KST								
Speed	1 - 10,000 min^{-1} KL -405 only 1 - 16,000 min^{-1} KL only 2 - 24,000 min^{-1} 4 - 42,000 min^{-1}								
Number of passages	1								
Housing connection	B - radial C - axial								
Nominal diameter	DN 04, …, 10 mm (dimension A)								
Rotor connection	L - Left-handed thread M 16 x 1.5 R - Right-handed thread M 16 x 1.5	K, KT only KS as per customer specification							
Max. pressure P in bar	8 - 80 bar 15 - 150 bar	K, KT only KL, KLT only up to 70 bar							
Consecutive numbers for special versions, numbering by factory									

Internal Coolant Supply

Traditionally, the tool tips have been cooled by supplying cooling lubricant from an external source. However, in many processes such as milling, this type of external cooling does not yield the expected result and decreases the service life of the tools, in particular in the case of high speeds of rotation. State-of-the-art machine tools use systems that supply the coolant through the electro-spindle. This solution offers many benefits:

- **Improved lubrication and cooling of the tools and the machined part**
- **Higher cutting speeds**
- **Better removal of the chips from the machining area**
- **Cleaning of the tool cone with air**
- **Low coolant consumption**
- **Extended service life of the tool**

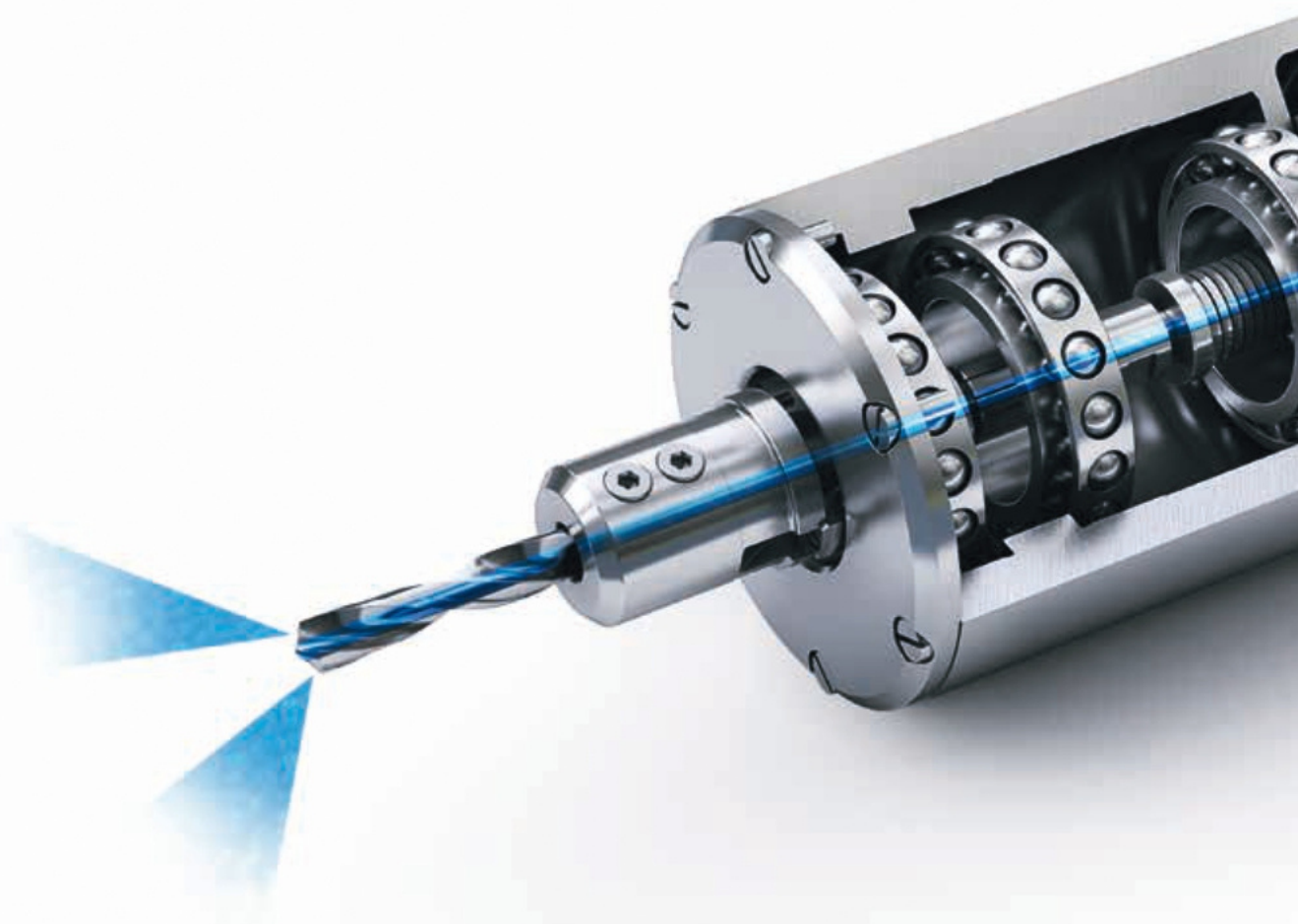

Selection of the Rotary Union for Cooling Lubricant

Supplying the coolant through the electro-spindle requires a high-quality rotary union. The most important parameters for choosing the right rotary union comprise:

- **Fluid to transfer (i.e. cooling lubricant, minimum quantity lubrication, air, cutting oil)**
- **Speed of the machine**
- **Pressure and temperature**
- **Type of connection to the machine: rotor with thread, plug-in rotor at housing supported execution or bearingless seal kit**
- **Filtration of fluid**

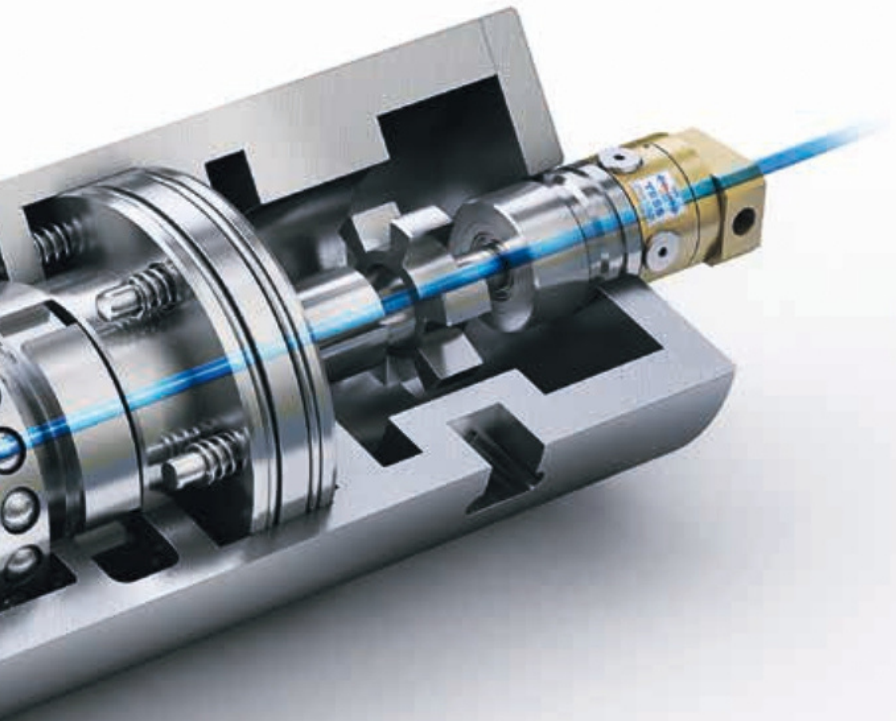

In addition to these parameters, the footprint available for mounting the rotary union must also be considered. The next step is to select whether a completely self-supported union (with bearings) or a kit solution without bearings best meets your requirements. Rotary unions with rolling bearings allow for easy installation onto the spindle. In addition, they are supplied fully tested to the agreed specification by the manufacturer.

The bearingless version has smaller dimensions but mounting is more complex. This version excels with less vibration and can be operated at higher speeds. Since it is a combination of components provided by the customer and components supplied by the manufacturer of the rotary union, installation requires special care.

Maier Sealing Systems and Rotary Unions for Machine Tools

– Seals always in contact - „closed seals"
– Seals with temperature control - „TESS technology"
– Bearingless seal kits

Closed seals

The seal faces of closed seals are always in contact. The classical mechanical seal provides a fluid film between the seal faces.

Dry run is possible only very briefly, if at all. On the other hand, the permanently closed seal faces have the benefit of avoiding pressure peaks so there is no risk of seal rupture; in addition, there is no leakage when the cooling lubricant is switched on and off.

Seals with thermal relief "TESS technology" for dry run

The TESS technology (Thermal Expansion Sealing Systems) is an internationally patented Maier development. It combines the benefits of the permanently closed seal and the capability of dry run. The system works like a classical closed seal when cooling lubricant flows through it.

In case of dry air or fully dry operation, the system detects an increase in temperature and reduces the specific closing pressure applied to the seal faces without separating them. This constantly limits the temperature in the seal gap. Leakage is avoided.

Bearingless seal kits

Maier also provides solutions without rolling bearings. Solutions without rolling bearings lend themselves for applications involving highly limited space or high speed. Due to the lower mass, vibrations are eliminated or reduced; adaptation in view of rolling bearing is not required. Series KS is also a solution with "closed seals", the seal faces are permanently in contact

TESS also allows for dry run in the case of these solutions. Type KST uses a temperature sensor which controls an additional circuit via the machine control. In the case of increasing temperatures, counter-pressure is generated which reduces the pressing force and, by implication, the temperature.

KL – KLT

Technical Description

Series KL consists of the versions KL and KLT. They share characteristics such as

– Housing made of stainless steel and anodized aluminium
– Adapted mechanical seal, seal faces always in contact
– Bearings protected by labyrinth seal and drain holes

Type KL is only suitable for cooling lubricant.

Type KLT with patented TESS technology is suitable for cooling lubricant and dry run without constraints, for minimum quantity lubrication or for dry air.

Application Data

Fluid:

Cooling lubricant (KL and KLT):	70 bar	Temperature:	50 °C
Minimum quantity lubrication (KLT):	10 bar	Speed:	16,000 min^{-1}
Dry air (KLT):	10 bar	Filtration:	50 micron

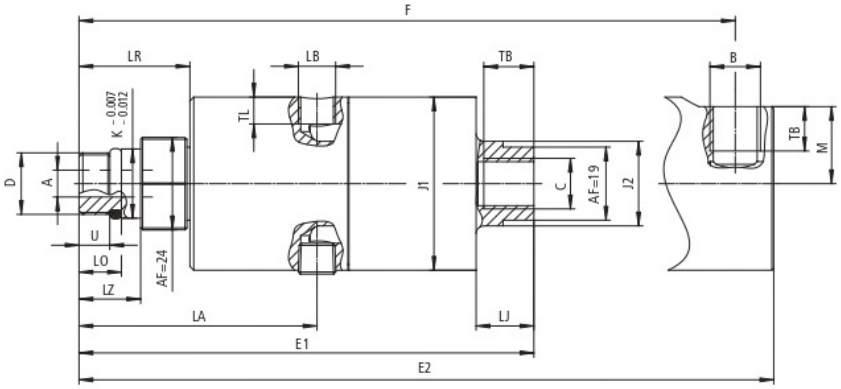

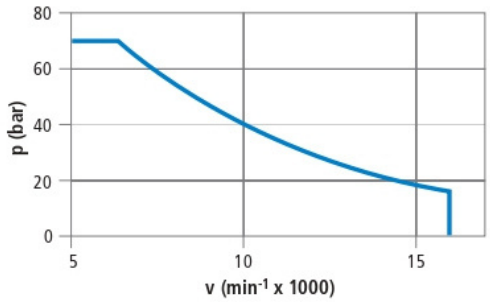

Type	KLT 11 C 07 L-401	KLT 11 B 07 L-405	KLT 11 C 07 L-401	KL 11 B 07 L-1	KLT 11 B 07 L-401	KL 11 C 07 L-1
Ordering no.	1121208-401	1121202-405	1121208-405	1121202-001	1121202-401	1121202-001

Dimensions

ø A	B	C	D	E1	E2	F	ø J1	ø J2	ø K	LA	LB	LJ	LO	LO	LZ	M	TB	TL	U
7	G 1/4"	G 1/4"	M16x 1,5L	118.3	119.3	109.8	45	22	18	61.8	G 1/8"	15	11	28.8	16	20	13	7	8

Subject to technical modifications without notice.

K – KT

Technical Description

Series K consists of the versions K 21, KT 21 and KT 41. They share characteristics such as
– Housing made of stainless steel and anodized aluminium
– Adapted mechanical seal, seal faces always in contact
– Bearings protected by labyrinth seal and drain holes
– Passages free from springs and edges
– Possible stroke of driving rod up to 25 mm
– Any position adjustable for radial connection

Type K is only suitable for cooling lubricant.

Type KT with patented TESS technology is suitable for cooling lubricant and dry run without constraints, for pressure peaks, for minimum quantity lubrication or for dry air.

Type KT 41 is suitable for even higher speed and pressure.

Application Data

Fluid:

Cooling lubricant (K only):	80 bar	Temperature:	50 °C
Cooling lubricant and pressure peaks (KT only):	80 bar	Speed: K 21 and KT 21	24,000 min^{-1}
Cooling lubricant and pressure peaks (KT only):	150 bar	KT 41	42,000 min^{-1}
Minimal quantity lubrication (KT only):	10 bar	Filtration:	50 Micron
Dry air (KT only):	10 bar		

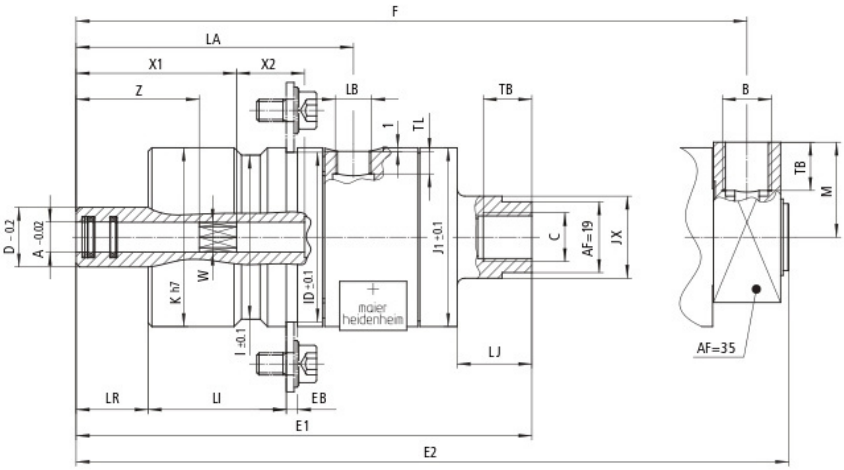

Type	K 21 B 07-14	K 21 C 07-14	KT 21 B 078-15	KT 21 C 078-15	KT 21 B 0715-16	KT 21 C 0715-16	KT 41 B 0715-18	KT 41 C 0715-18
Ordering no.	1118202-014	1118208-014	1118202-015	1118208-015	1118202-016	1118208-016	1118204-018	1118210-018

Dimensions

ø A	B	C	ø D	EB	E1	F	ø I	ø ID	ø J1	ø J2	ø K	LA	LB	LI	LJ	LR	LR	M	TB	TL	W	X1	X2	Z
8.1	G 1/4"	G 1/4"	16	3	122.1	122.3	111.1	44	48	22	48	74.3	G 1/8"	37	20	19.3	19.3	25.5	13	6	8-kt AF7.5	43	18	33

Subject to technical modifications without notice.

K – KT

Technical Description

Series K consists of the versions K 21, KT 21 and KT 41. They share characteristics such as
– Housing made of stainless steel and anodized aluminium
– Adapted mechanical seal, seal faces always in contact
– Bearings protected by labyrinth seal and drain holes
– Passages free from springs and edges
– Possible stroke of driving rod up to 25 mm
– Any position adjustable for radial connection

Type K is only suitable for cooling lubricant.

Type KT with patented TESS technology is suitable for cooling lubricant and dry run without constraints, for pressure peaks, for minimum quantity lubrication or for dry air.

Type KT 41 is suitable for even higher speed and pressure.

Application Data

Fluid:

Cooling lubricant (K only):	80 bar	Temperature:	50 °C
Cooling lubricant and pressure peaks (KT only):	80 bar	Speed: K 21 and KT 21	24,000 min^{-1}
Cooling lubricant and pressure peaks (KT only):	150 bar	KT 41	42,000 min^{-1}
Minimal quantity lubrication (KT only):	10 bar	Filtration:	50 Micron
Dry air (KT only):	10 bar		

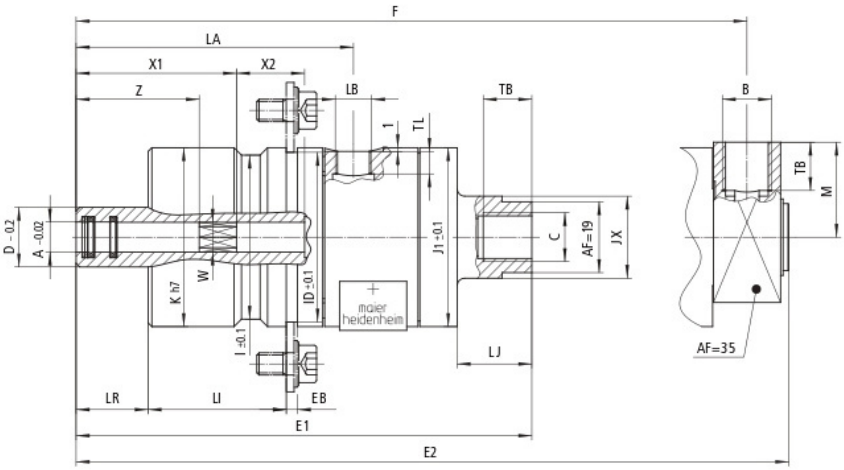

Type	K 21 B 07-14	K 21 C 07-14	KT 21 B 078-15	KT 21 C 078-15	KT 21 B 0715-16	KT 21 C 0715-16	KT 41 B 0715-18	KT 41 C 0715-18
Ordering no.	1118202-014	1118208-014	1118202-015	1118208-015	1118202-016	1118208-016	1118204-018	1118210-018

Dimensions

ø A	B	C	ø D	EB	E1	F	ø I	ø ID	ø J1	ø J2	ø K	LA	LB	LI	LJ	LR	LR	M	TB	TL	W	X1	X2	Z
8.1	G 1/4"	G 1/4"	16	3	122.1	122.3	111.1	44	48	22	48	74.3	G 1/8"	37	20	19.3	19.3	25.5	13	6	8-kt AF7.5	43	18	33

Subject to technical modifications without notice.

KS

Technical Description

– Housing made of stainless steel or anodized aluminium, mounting to spindle via lugs
– Rotor made of stainless steel, rotates with spindle rotor. No own bearing. Rotation transmission and sealing in spindle via O-rings or threads, O-ring and centering.
– Adapted mechanical seal, seal faces always in contact. Spring in housing
– Free, unrestricted passage for fluid

Application Data

Fluid:

Cooling lubricant max.:	70 bar	Temperature max.:	50 °C
		Speed:	42,000 min^{-1}
		Filtration:	50 micron

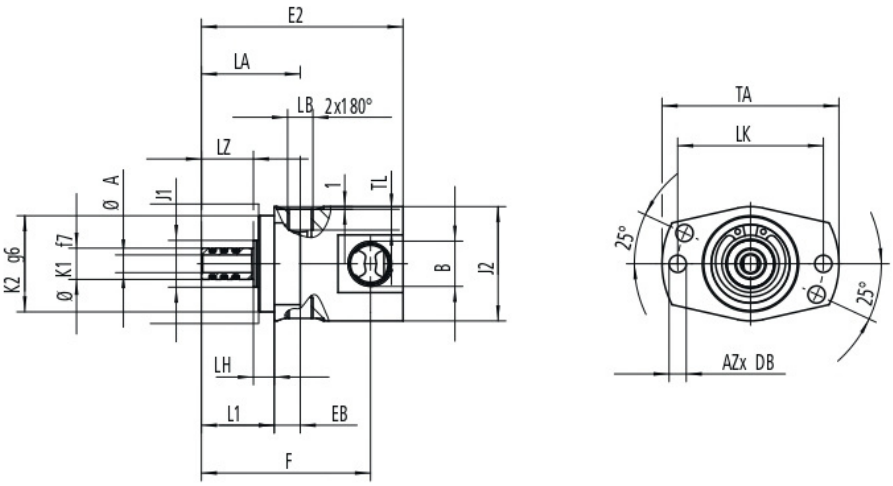

KST

Technical Description

– Housing made of stainless steel, fastening in spindle housing
– Rotor made of stainless steel, rotates with spindle rotor. No own bearing. Rotation transmission and sealing in the spindle via O-rings or threads, O-ring and centering.
– Adapted mechanical seal, seal faces always in contact
Counter ring in stationary housing part allows stroke for opening and closing

Application data

Fluid:

Cooling lubricant max.:	150 bar	Temperature max.:	50 °C
Minimum quantity lubrication max.:	10 bar	Speed:	42,000 min^{-1}
Dry air max.:	10 bar	Filtration:	50 micron

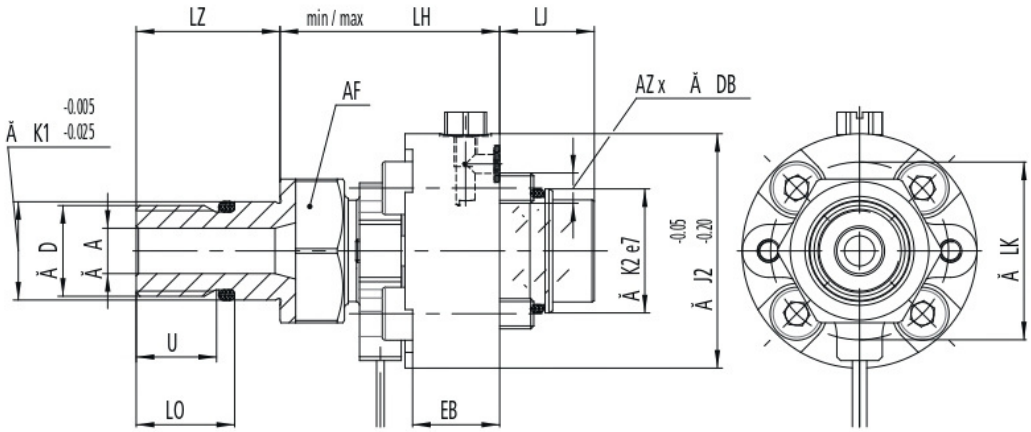

Leakage Monitoring

Technical Description

This leakage monitoring device monitors and collects leakage, thus allowing for monitoring the status of the rotary union. It is connected to the drain port of the rotary union and mounted at a point below the rotary union. The unit provides two alarm levels. The first one signals leakage while the second alarm provides an alert that the rotary union is about to fail. The leak monitoring unit only works with liquid cooling lubricant, no movement of spindle possible. Thus, the spindle is protected against leaking coolant.

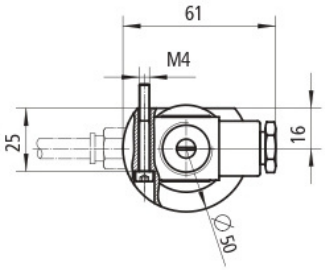

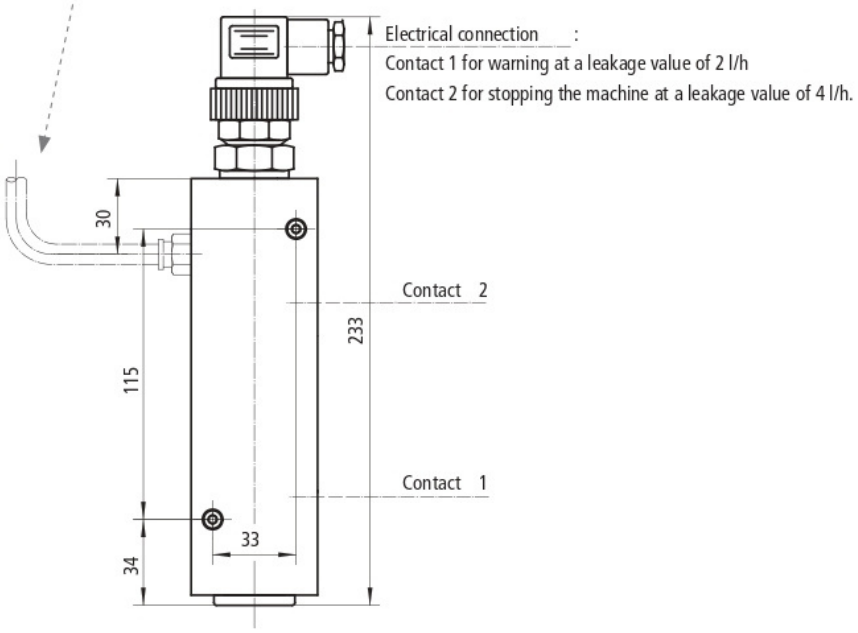

Installation

Installation of the Rotary Union

Always use with flexible hoses to connect the inlet and outlet lines. The flexible hoses must be connected to the rotary union before it is mounted to the spindle (this applies to all self-supported rotary unions and, in particular, to all rotary unions with rotors with threaded connection). Otherwise, loads and forces may be applied via the housing which reduces the service life of the rotary union. Verify the following when installing the hoses:

– Avoid bending the hoses (always use elbows)
– Do not exceed the permissible bend radius; do not direct the outlet lines upwards

In the case of vertical installation, the rotor of the rotary union must be mounted facing down (otherwise, cooling lubricant residue can damage the seal faces).

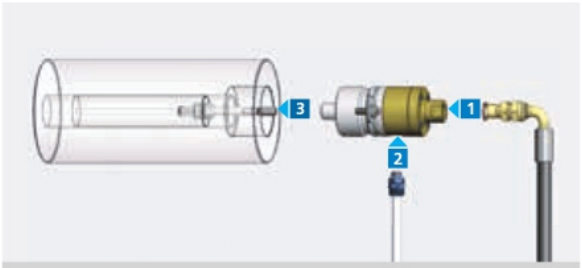

Housing-supported rotary union

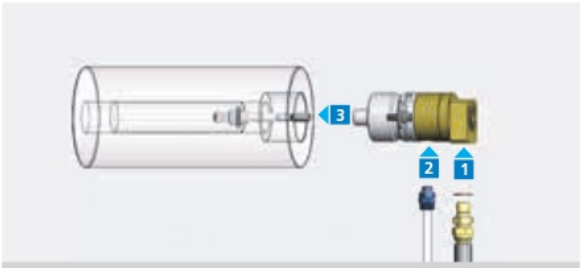

Housing-supported rotary union with radial inlet

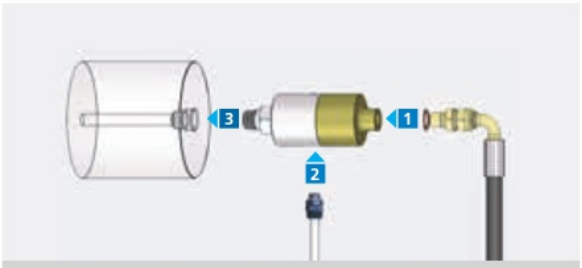

Rotary union with threaded connection with axial inlet

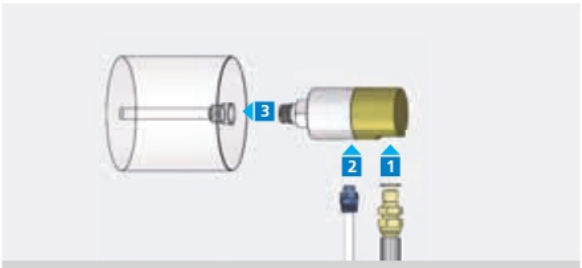

Rotary union with threaded connection with radial inlet

Mounting Kit

The M6 screws of the rotary unions (included in the mounting kit) must be mounted with a tightening torque of 19 Nm.

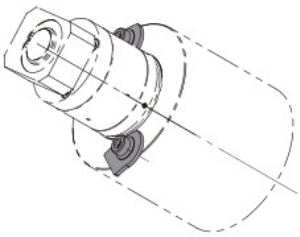

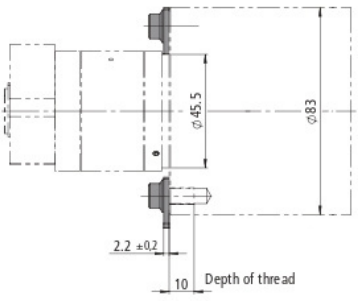

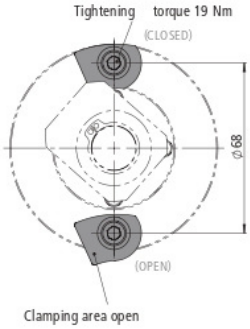

Installation

Connection of Inlet and Outlet

When connecting the supply line, verify that no extra load or tension is applied. The inlet line should lead bottom up, if possible. This reduces leakage during tool changes and the fluid remains in the line. The drain line must always be directed towards the bottom and torsion must be avoided. Leaking fluid must be able to be removed without obstacles from any position.

Vertical spindle – radial inlet

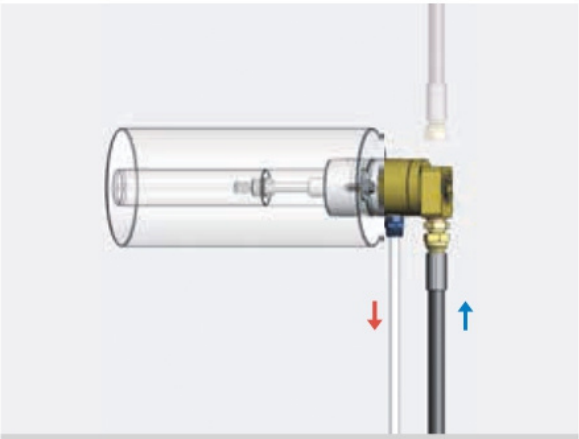

Horizontal spindle – radial inlet

Vertical spindle – axial inlet

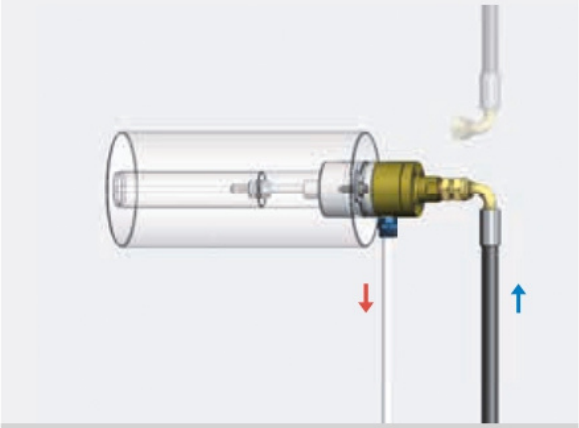

Horizontal spindle – axial inlet

With TESS technology, series KLT / KT rotary unions can run dry without problems both at maximum pressure and speed; the seal faces remain permanently closed. This helps to avoid the annoying and frequently detrimental drain of coolant through the open seal faces during tool changes. However, the lines should point downwards to reduce the risk of leakage through the spindle cone.

Mounting Tolerances

The following illustrations show typical connection interfaces: with threaded rotor and with housing-supported version with driving rod. These dimensions must be observed. Adherence to these dimensions is a key factor in the service life of the rotary union. Please see the drawings or operating instructions for dimensions not shown in this catalog.

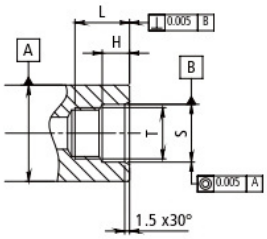

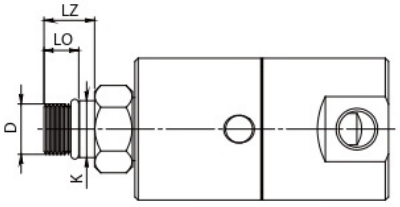

Mounting with thread at rotor

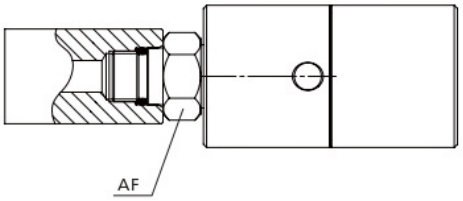

Mounting with thread at rotor

Rotor end					Spindle end				Tightening torque
D	LO	K	LZ	AF	T	S	H	L	
M 16 x 1.5	11	17.993 / 17.988	16	24	M 16 x 1.5	18.00 / 17.995	8.5	17	50Nm
5/8" - 18 UNF	9/16"	0.655" / 0.6553"	12/16	24	5/8" - 18 UNF	0.656 / 0.6556	9/32"	13/16"	50Nm

Subject to technical modifications without notice.

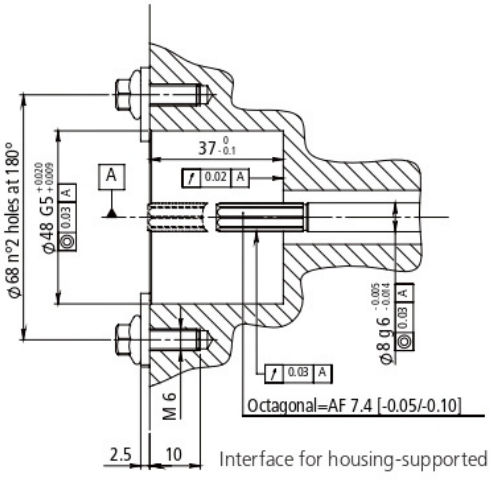

Interface for housing-supported version

Please visit www.maier-heidenheim.de and see our operating instructions for further information and safety instructions. Please contact the factory for your personal user data (user name and password).

Filtration

The fluid must be clean. Good filtration increases the service life of all plant components, including the rotary union. The required degree of filtration for series K series is 50 micron. This degree is normally required for pumps in machine tools.

Engenharia e Cia

Cursos | Treinamentos | Consultoria
Uniões Rotativas - Selos Mecânicos
Protetor de Mancal
Agente de Vendas Granpac
Distribuidor Autorizado Maier
contato@engenhariaecia.eng.br
Whats (11) 95696 7808
https://www.engenhariaecia.eng.br

Christian Maier GmbH & Co. KG
Würzburger Straße 67 – 69
89520 Heidenheim – Germany

Tel. +49 7321 3170
Fax +49 7321 317239

vkd@maier-heidenheim.de
www.maier-heidenheim.de